Power Line Communication

Chinmay Jadhav[1], Parth Katkar[2], Harshal Kolhe[3], Taraka Phadke[4]

[1-4]Department of Electronics and Telecommunication Engineering
K.C. College of Engineering & Management Studies & Research,
Kopri, Thane (E)-400 603, India

Abstract — Power line communication (PLC) presents an interesting and economical solution for Automatic Meter Reading (AMR). If an AMR system via PLC is set in a power delivery system, a detection system for illegal electricity usage may be easily added in the existing PLC network. In the detection system, the second digitally energy meter chip is used, and the value of energy is stored. The detector and control system are proposed. The architecture of the system and their critical components are given. The measurement results are given. The target of this study is to discover new and possible solutions for this problem.

I. INTRODUCTION

Power line communication (PLC) presents an interesting and economical solution for Automatic Meter Reading (AMR). If an AMR system via PLC is set in a power delivery system, a detection system for illegal electricity usage may be easily added in the existing PLC network. In the detection system, the second digitally energy meter chip is used, and the value of energy is stored.

The detector and control system are proposed. The architecture of the system and their critical components are given. The measurement results are given. The target of this study is to discover new and possible solutions for this problem. It provides broadband data communications on conductors which are already in use for the transmission of electric power using a modular signal. The wide range of power-line communication technologies are needed for different applications, ranging from home automation to Internet access which is often called broadband over power lines (BPL).

II. LITERATURE SURVEY

According to Jovita Serrao et al. (2012) paper serves as a general and technical reference to transmission of data using a power line carrier communication system which is a preferred choice over Wireless or other Home Networking technologies due to the ease of installation, availability of AC outlets, higher throughput, low cost, reliability, and security.

Abdul Mannan et al. (2014): In this paper, we give an overview of the power line communication (PLC) technology. This paper presents an overview of the research, applications, standards and importance of the power line communication. Power line communication is an emerging home network technology that allows consumers to use their already existing wiring system to connect home appliances to each other and to the Internet. Noise in power line communication and impulsive noise are presented in this paper.

III. CIRCUIT DIAGRAM

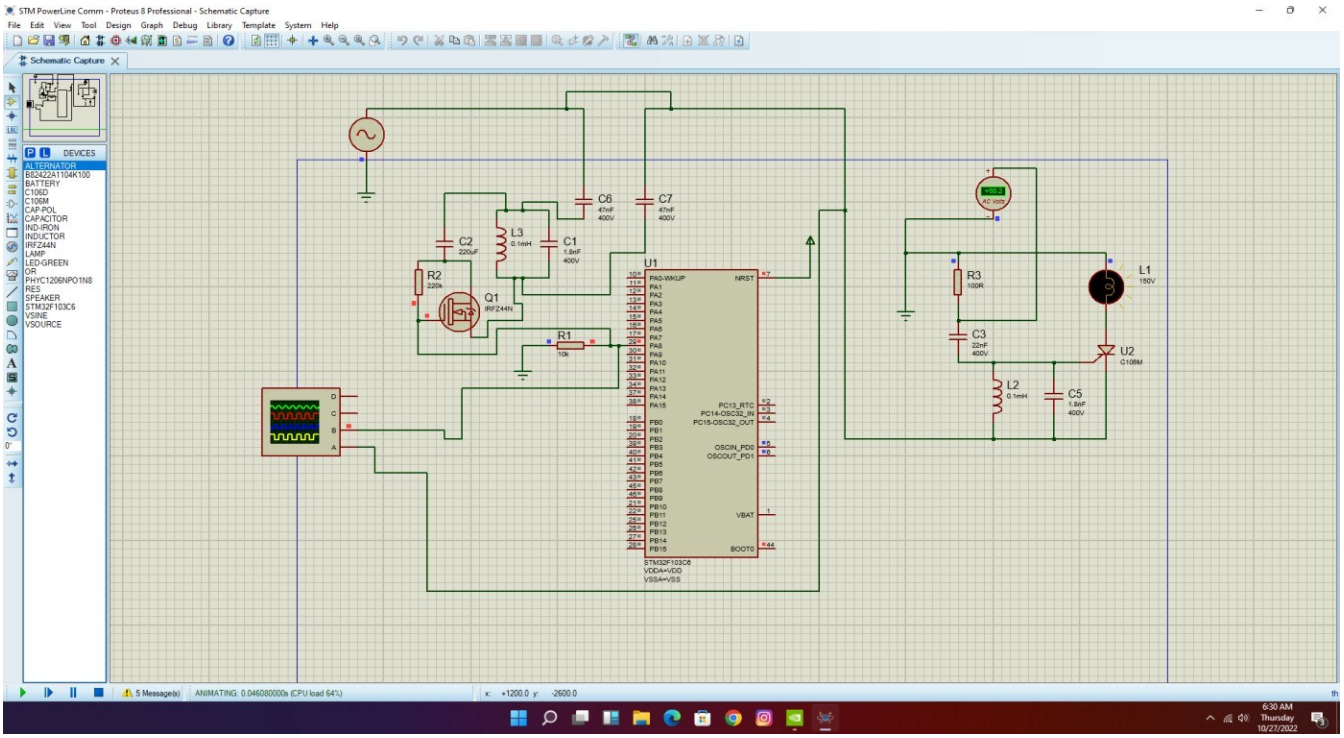

We are using STM32 board for generation of PWM signal. The PWM signal is then applied to the Line tuner. Line tuner is suitable matching unit. The signal is then transmitted through the coupling capacitor. It protects the PLC equipment from low frequency, high voltage signal by acting as a High Pass filter. But it allows high frequency power signals to pass through it. Signal is transmitted through the power line to the receiver end. In this process wave trap protects the electrical substances from high frequency communication signals by acting as a low pass filter. It opposes the signal to enter into the switch yard. At the receiver, the coupling capacitor acts as High pass filter, it allows high frequency power signals to pass through it.

The high frequency signal transmitted by the transmitter is received to the receiver. Receiver has LC circuit, which starts resonating when high frequency signal is received. When the Gate of the C106M gets some triggered voltage, it starts working as a short circuit. Because of high frequency signal, LC circuit triggers the gate of the C106M, and the load is turned on. When signal is not received the gate of C106M is not triggered and the load remains in off condition

IV. COMPONENTS LIST AND SPECIFICATION

IV.1. STM 32 F103C6

STM32F103C6 is an ARM 32-bit Cortex-M3 Microcontroller, 72MHz, 32kB Flash, 10kB SRAM, PLL, Embedded Internal RC 8MHz and 32kHz, Real-Time Clock, Nested Interrupt Controller, Power Saving Modes, JTAG and SWD, 2 Synch. 16-bit Timers with Input Capture, Output Compare and PWM, 16-bit 6-ch Advanced Timer

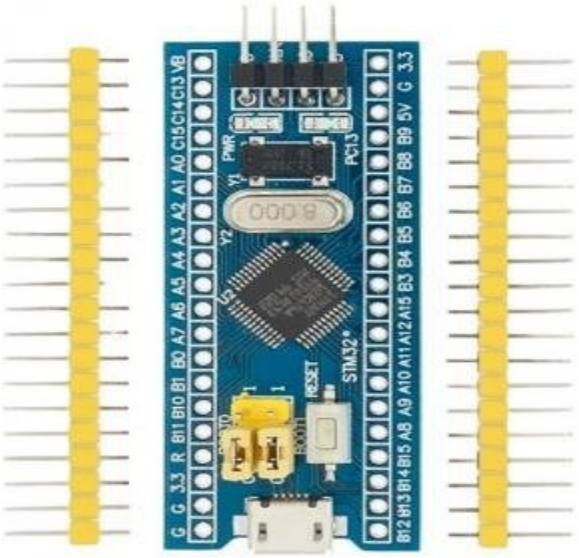

IV.2. Capacitor

A capacitor is a device that stores electrical energy in an electric field. It is a passive electronic component with two terminals. The effect of a capacitor is known as capacitance. While some capacitance exists between any two electrical conductors in proximity in a circuit, a capacitor is a component designed to add capacitance to a circuit. The physical form and construction of practical capacitors vary widely, and many types of capacitors are in common use. Most capacitors contain at least two electrical conductors often in the form of metallic plates or surfaces separated by a dielectric medium.

IV.3. Resistor

A resistor is a passive two-terminal electrical component that implements electrical resistance as a circuit element. In electronic circuits, resistors are used to reduce current flow, adjust signal levels, to divide voltages, bias active elements, and terminate transmission lines, among other uses. High-power resistors that can dissipate many watts of electrical power as heat may be used as part of motor controls, in power distribution systems, or as test loads for generators. Fixed resistors have resistances that only change slightly with temperature, time, or operating voltage. Variable resistors can be used to adjust circuit elements or as sensing devices for heat, light, humidity, force, or chemical activity.

IV.4. IRFZ44N

The IRFZ44N is a N-channel MOSFET with a high drain current of 49A and low Rds. value of 17.5 mΩ. It also has a low threshold voltage of 4V at which the MOSFET will start conducting. Hence it is commonly used with microcontrollers to drive with 5V. However, a driver circuit is needed if the MOSFET must be switched in completely. Gate Controls the biasing of the MOSFET. Current flows in through Drain. Source Current flows out through Source.

IV.5. C106M Thyristor

The Max off stage voltage is 600V. Max load current is 4A. Load current is 2.5A. Gate current is 50µA.

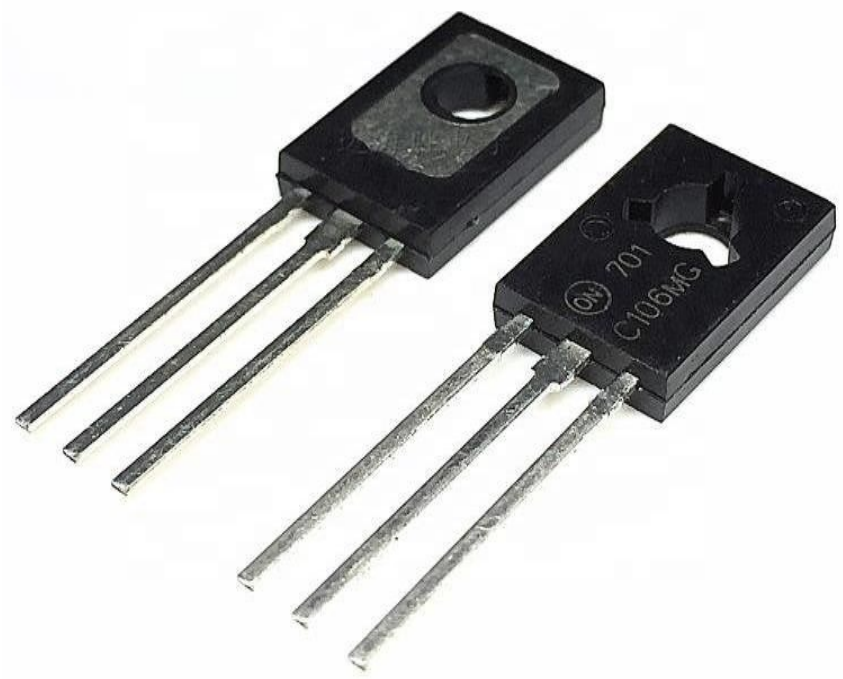

V. SOFTWARE USED

Proteus 8 Professional is a software which can be used to draw schematics, PCB layout, code and even simulate the schematic. It is developed by Lab center Electronic. Drawing the schematic is very easy using Proteus.

STM32CubeIDE is an advanced C/C++ development platform with peripheral configuration, code generation, code compilation, and debug features for STM32 microcontrollers and microprocessors. It is based on the Eclipse®/CDT™ framework and GCC tool chain for the development, and GDB for the debugging.

STM32CubeIDE integrates STM32 configuration and project creation functionalities from STM32CubeMX to offer all-in-one tool experience and save installation and development time.

STM32CubeIDE includes build and stack analyzers that provide the user with useful information about project status and memory requirements.

STM32CubeIDE also includes standard and advanced debugging features including views of CPU core registers, memories, and peripheral registers, as well as live variable watch, Serial Wire Viewer interface, or fault analyzer.

VI. FUTURE SCOPE

1. Results from the validation should lead to improved design, in terms of cost, performance, and energy requirements for the PLCC receiver and continuous carrier transmitter, as well as detailed simulation of carrier propagation in a number of different environments and scenarios.

2. Greater research in transmission of digital signals over power lines will enable us to come up with various applications of the concept.

3. This will of course require us to update the hardware associated with the power lines as now we will have to include routers at transformer sections.

4. Protocols and standards for the same will have to be developed if this technology has to be implemented on a commercial scale.

5. Internet access could also be made possible by the setting up of Wi-Fi Routers at areas close to transformers.

VII. CONCLUSION

No separate wires are needed for communication purposes, as the power lines themselves carry power as well as communication signals. Hence the cost of constructing separate telephone lines is saved.

When compared with ordinary lines the power lines have appreciably higher mechanical strength. They would normally remain unaffected under the conditions, which might seriously damage telephone lines.

Power lines have large cross-sectional areas resulting in very low resistance per unit length. Consequently, the carrier signals suffer much less attenuation than when they travel on usual telephone lines of equal lengths.

VIII. REFERENCES

1. https://www.researchgate.net/publication/239762728_Low_Complexity_Turbo_Code_Specification_for_Power Line_Communication_PLC
2. https://circuitdigest.com/article/what is power line communication plc and how does it work
3. https://repository.najah.edu/bitstream/handle/20.500.11888/11737/power_line_communication.doc?sequence=1&isAllowed=y